SR3018-12-16

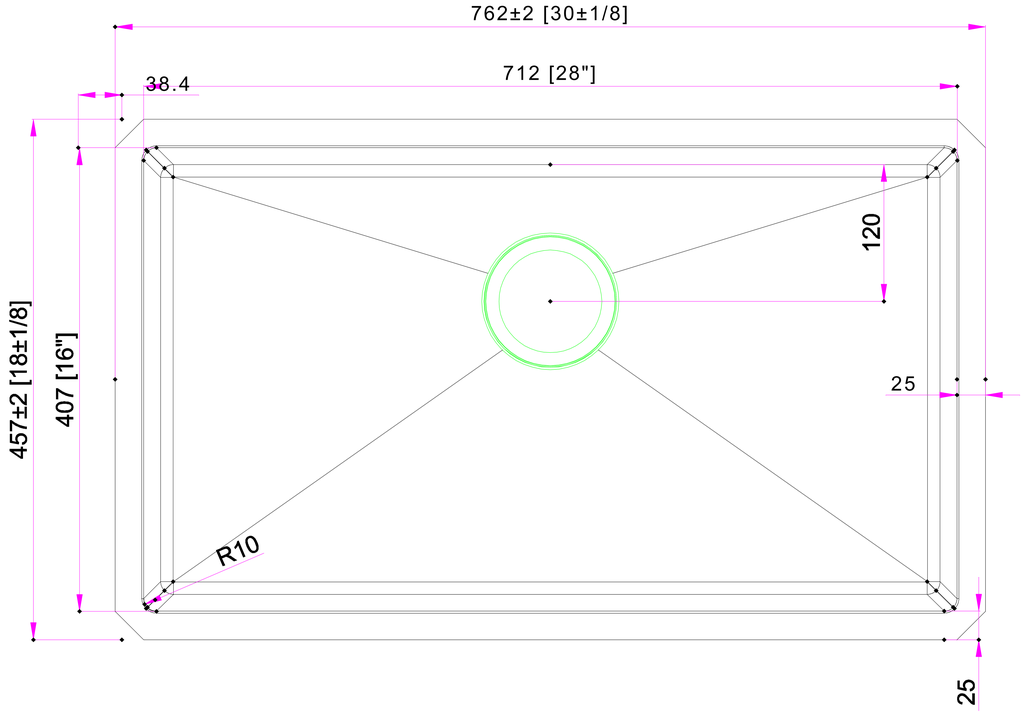
762±2 [30±1/8]
712 [28"]
38.4
120
25
457±2 [18±1/8]
407 [16"]
R10
25

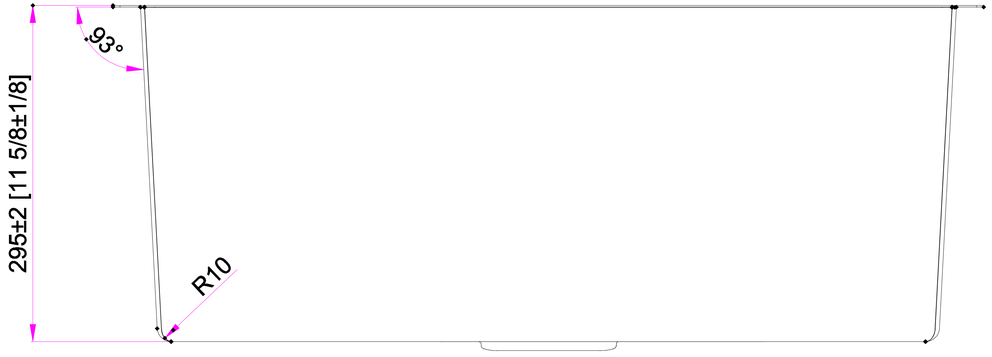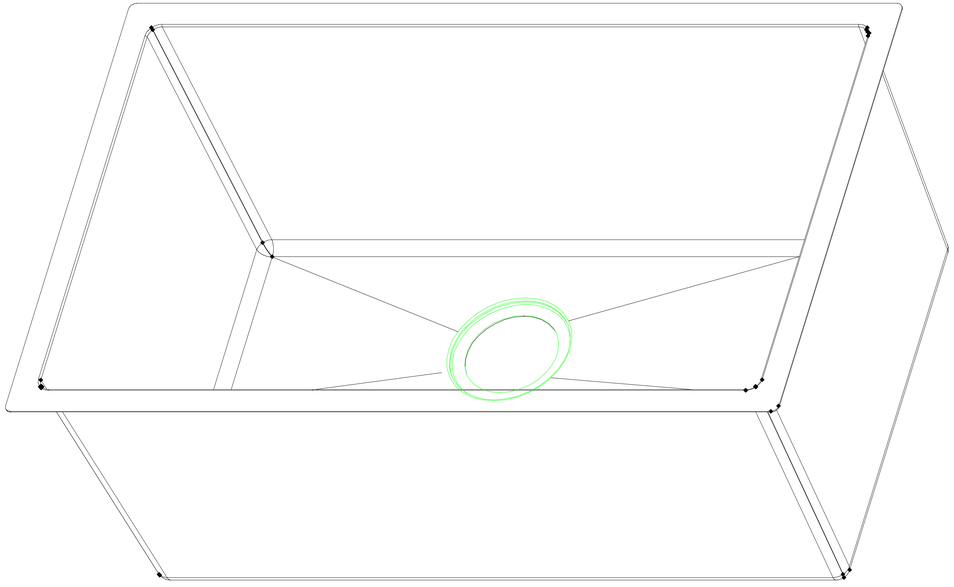
93°
295±2 [11 5/8±1/8]
R10